OVEGA-Wall Washer

TLO020-51

DESCRIPTION

OVEGA(EN-TLO series, Wall Washer version) is a stylish and compact LED track light that will fit smoothly into any commercial environments where requires vertical illuminance for brightening and dividing the space. It can wash the wall very smoothly and evenly without any shadow. The head can be adjusted precisely 360°+ horizontal(rotation) and 90° vertical without dead angle. The light, as a result, is emitted exactly where you need it. The integrated driver gives clean feeling and the ceiling will not be cluttered with drivers aimed in different directions.

FEATURES

- Stylish and compact design with integrated driver.
- Excellent modular combination concept: integrated driver + different fixture bases, DIY to get different light solutions and easy for maintenance.
- Asymmetrical light distribution for highly uniform wall washing, 25*75°.
- Patented joints can hold the track head at any positions without malfunctions.
- 360°+ rotation without dead angle and 90° vertical aiming.
- Use OVEGA family to get a unified impression in one environment.

ELECTRICAL

Power:	20W
Voltage:	220-240V / 100-277V AC
Frequency:	50/60Hz
Power factor:	>0.90
Dimming:	On-off / 0/1-10V / DALI / TRIAC

OPTICAL

LED type:	COB
Lumen output:	1396lm
Beam optic:	25°x75°
Color quality:	CRI 90+/95+, SDCM≤3
Light color:	Static white: 2700K/3000K/3500K/4000K

LUMINAIRE

Installation methods:	Track-mounted / Wall-mounted
Housing color:	Black / White / Silver
Operating temperature:	-20°C~40°C
Lifespan:	>50000h@80%(L80)
Warranty:	5 years limited warranty

DETAILS

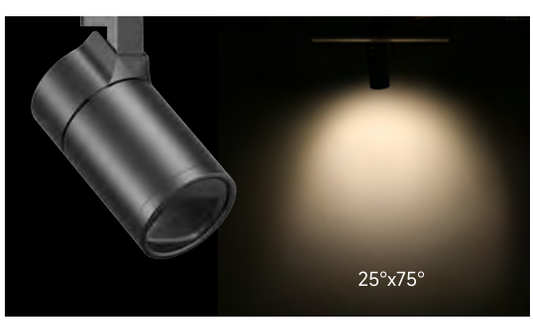

ENCORE INTERNATIONAL COMPANY LIMITED
HK HQ: Room 1, 16/F, Empress Plaza 17-19 Chatham Road South Tsim Sha Tsui, KL.
Factory: 2/F, Bld 8th, Zhengzhong Industrial Park, Qiaotou Community, Fuyong, Bao'an District, Shenzhen.
E: sales@encore-tech.com
T: +852 6768 2519
ENCORE
www.encore-tech.com

ORDERING INFORMATION

TLO								
SERIES	**POWER**	**INSTALLATION**	**HOUSING COLOR**	**TRACK TYPE**	**CRI**	**CCT**	**OPTIC**	**DIMMING**
☐ **TLO** OVEGA	☐ **020** 20W	☐ **51** Track	☐ **W** White	☐ **J** 2-pin Juno	☐ **9** 90+	☐ **27** 2700K	☐ **2X7** Wall wash 25°x75°	☐ **V** 0/1-10V
		☐ **54** Wall	☐ **B** Black	☐ **L** 2-pin Lightolier	☐ **H** 95+	☐ **30** 3000K		☐ **T** Triac
			☐ **S** Silver	☐ **H** 3-pin Halo		☐ **35** 3500K		☐ **X** 0-10V/Triac
				☐ **G** 4-pin Global		☐ **40** 4000K		☐ **D** DALI
				☐ **D** 6-pin DALI				☐ **N** Non-dimming

PHOTOMETRIC DATA (NON-DIMMING)

POWER	CCT	CRI	BEAM OPTIC	LUMENS (lm)	EFFICACY (lm/W)	MAX CANDELA (cd)
20W	3000K	90	25°x75°	1396	70	1062

LIGHT DISTRIBUTION

3000K 20W

25°x75°

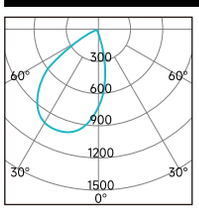

D(cm)	h(m)	E(lx)
106.99	1	882.4
213.99	2	220.6
320.98	3	98.04
427.97	4	55.15
534.97	5	35.29

LUMEN MULTIPLIERS

CCT	MULTIPLIER
2700K	0.94
3000K	1.00
3500K	1.00
4000K	1.04

Applying Lumen Multipliers to Calculate Deliveried Lumens

Base Fixture Delivered Lumens (from PHOTOMETRIC DATA)	x	CCT Multiplier	=	Delivered Lumens for Desired Fixture
STANDARD TRIM Example: TLO020-51 20W 4000K				
1396 lm	x	1.04	=	1451 lm

WALL WASHING SUGGESTED SPACING AND WALL DISTANCE

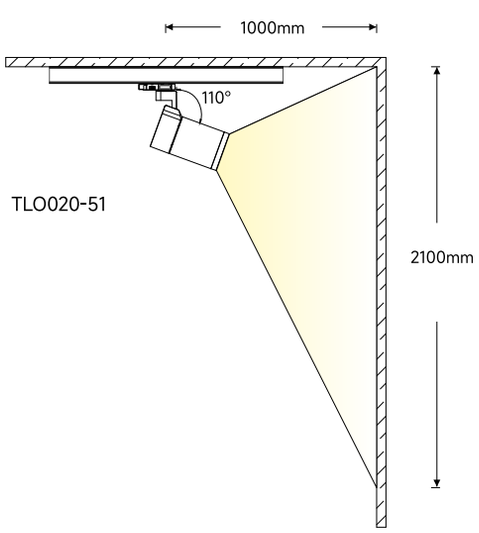

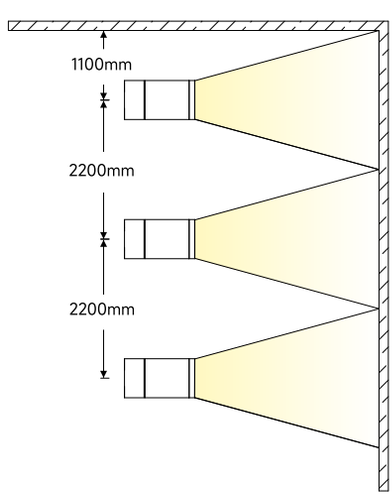

ENCORE INTERNATIONAL COMPANY LIMITED
HK HQ: Room 1, 16/F, Empress Plaza 17-19 Chatham Road South Tsim Sha Tsui, KL.
Factory: 2/F, Bld 8th, Zhengzhong Industrial Park, Qiaotou Community, Fuyong, Bao'an District, Shenzhen.
E: sales@encore-tech.com
T: +852 6768 2519
ENCORE
www.encore-tech.com

DIMENSION

Track-mounted

TLO020-51

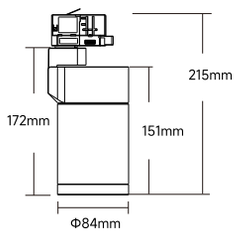

INSTALLATION

Track-mounted

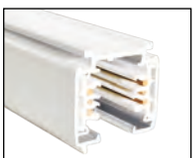

6-pin 3-circuit

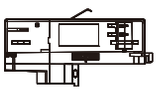

DALI

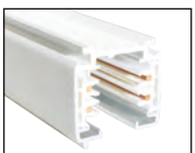

4-pin 3-circuit

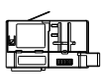

Global

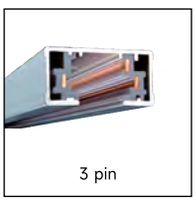

3 pin

Halo

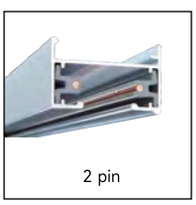

2 pin

Juno

Lightolier

Wall-mounted

TLO020-54

ENCORE INTERNATIONAL COMPANY LIMITED
HK HQ: Room 1, 16/F, Empress Plaza 17-19 Chatham Road South Tsim Sha Tsui, KL.
Factory: 2/F, Bld 8th, Zhengzhong Industrial Park, Qiaotou Community, Fuyong, Bao'an District, Shenzhen.
E: sales@encore-tech.com
T: +852 6768 2519
ENCORE
www.encore-tech.com

EXCELLENT MODULAR COMBINATION CONCEPT

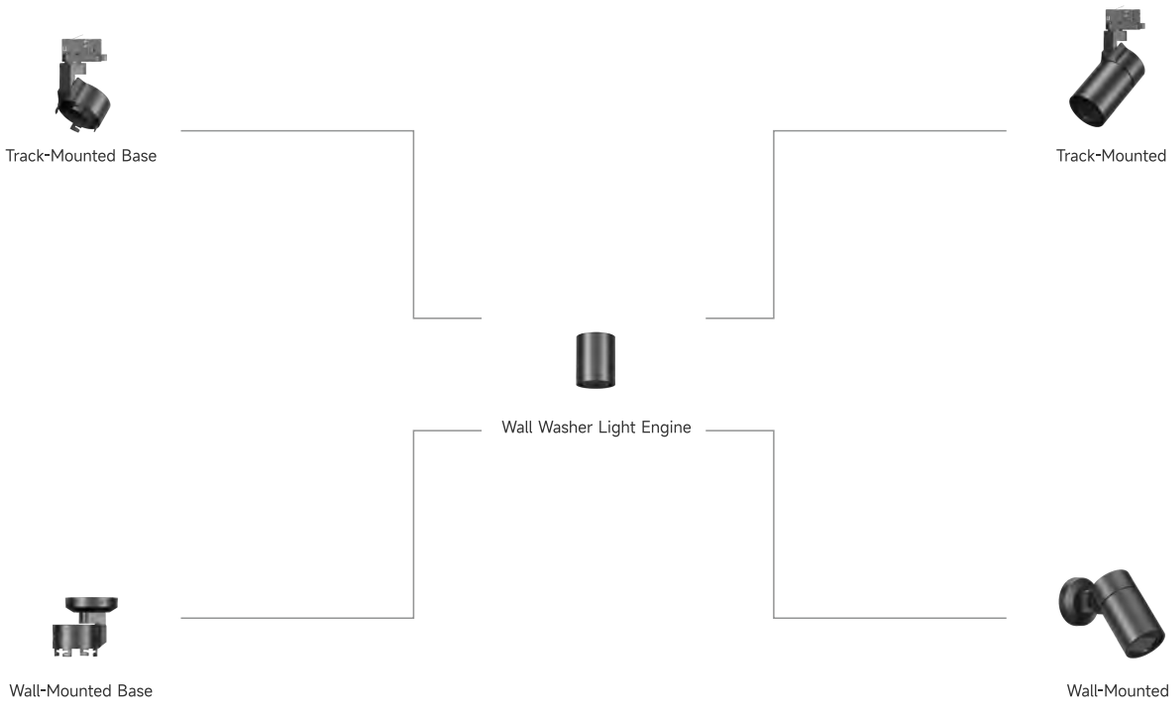

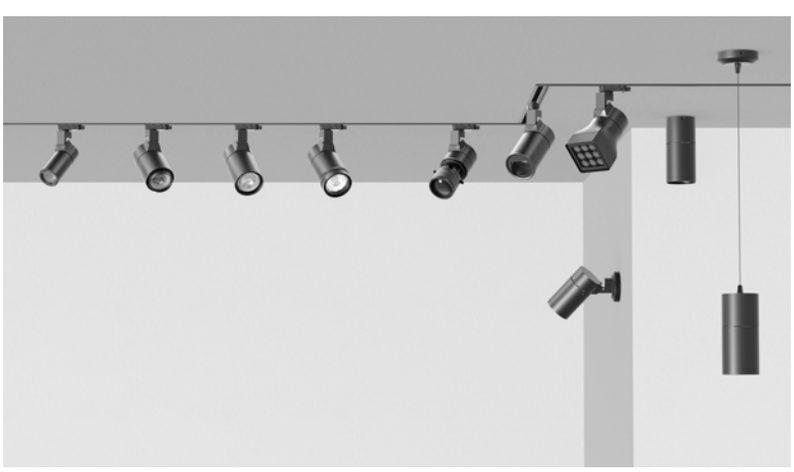

OVEGA TRACK LIGHT SYSTEM

UNLIMITED POSSIBILITIES with OVEGA family. Seven versions in excellent modular combination concept with similar appearances but different light solutions entitle OVEGA family will fit smoothly into any retails, museums and galleries environment.

In versions with different light solutions, OVEGA covers high performance accent lighting with very narrow beam 6°, different interchangeable beam lens & different optical accessories, flood lighting of exhibits, beam angle adjusting from narrow to wide, wall washing and projection.

Except versatile light solutions, OVEGA is also a complete family with different installation methods(track-mounted, pendant, surface-mounted and wall-mounted). So, if you have an environment where ask for different light solutions & different installation methods, OVEGA family will be a great choice to get a unified impression.

DETAILS

Scan to know more about product information

ENCORE INTERNATIONAL COMPANY LIMITED
HK HQ: Room 1, 16/F, Empress Plaza 17-19 Chatham Road South Tsim Sha Tsui, KL.
Factory: 2/F, Bld 8th, Zhengzhong Industrial Park, Qiaotou Community, Fuyong, Bao'an District, Shenzhen.
E: sales@encore-tech.com
T: +852 6768 2519
ENCORE
www.encore-tech.com